UDC 621.95:621.791

Vitaliy Shirokobokov — Candidate of Technical Science, Associate Professor, Department of Metal Forming, National University Zaporizhzhia Polytechnic, Zaporizhzhia, Ukraine, *e-mail: shirokobokov@gmail.com*, ORCID: 0000-0003-4294-7406

Vasyl Obdul — Candidate of Technical Science, Associate Professor, Department of Metal Forming, National University Zaporizhzhia Polytechnic, Zaporizhzhia, Ukraine, *e-mail: obdul@zp.edu.ua*, ORCID: 0000-0001-6490-8884

Teresa Bajor — Dr. of Technical Science, Czestochowa University of Technology, Czestochowa, Poland, *e-mail: teresa.bajor@pcz.pl*, ORCID: 0000-0003-0895-8523

Nataliia Shirokobokova — Candidate of Technical Sciences, Associate Professor, Department of Composite Materials, Chemistry and Technologies, National University Zaporizhzhia Polytechnic, Zaporizhzhia, Ukraine, *e-mail: nsonik11@gmail.com,* ORCID: 0000-0002-7009-6218

Tetiana Matiukhina — Postgraduate, Department of Metal Forming, National University Zaporizhzhia Polytechnic, Zaporizhzhia, Ukraine, *e-mail: tetianamatiukhina88@gmail.com*, ORCID: 0009-0005-7503-8016

ANALYSIS OF METHODS FOR MAKING HOLES IN METAL WITH A THICKNESS OF MORE THAN 10 mm

Purpose. *The aim of this study is to review and comparatively analyze modern methods for creating holes in metal workpieces with a thickness of over 10 mm, evaluate their efficiency, and investigate the influence of processing parameters on the quality of the resulting holes. Attention is given to conventional methods, such as drilling and punching with specialized tools, as well as non-traditional methods, including waterjet abrasive cutting, laser cutting, and electrical discharge machining (EDM).*

Research methods. *The study employed a literature review and experimental investigations. Experimental methods included step drilling, reaming, milling, hydro-abrasive cutting, laser cutting, EDM drilling, and cold stamping. Hole quality was assessed using geometric measurements, surface roughness analysis, and examination of deformation zones. Experimental setups included variable punch and die designs to study the influence of tool geometry, punch-die clearance, and cutting forces on hole quality.*

Results. *It was determined that each method has distinct advantages and limitations. Punching is most effective for high-speed, mass production with consistent geometry but requires precise tooling and rigid press equipment. Drilling and laser cutting are suitable for single or small-series production, offering high accuracy but slower speed. Hydro-abrasive cutting provides smooth edges and minimal thermal impact, though it is expensive and slower for small holes. EDM ensures exceptional precision for hard or high-alloy materials but has low productivity. Comparative analysis highlighted the influence of process parameters, such as punch-die clearance, cutting force, feed rate, and tool design, on the quality and accuracy of holes.*

Scientific novelty. *The study provides a systematic comparison of multiple hole-making methods for thick metal workpieces, integrating experimental results with process parameter analysis. The novelty lies in identifying optimal parameters and tool designs that minimize edge defects and deformation, offering guidance for high-precision hole formation in thick metals, which has not been comprehensively addressed in previous research.*

Practical value. *The findings can guide the selection of appropriate hole-making technologies in industrial metalworking, optimize productivity, improve surface quality and dimensional accuracy, reduce material waste, and inform the design of tooling and press equipment for mass and small-series production.*

Key words: *hole-making methods, thick metal workpieces, punching, drilling, laser cutting, hydro-abrasive cutting, EDM, cold stamping, process optimization, surface quality.*

Introduction

In modern mechanical engineering, aviation, energy and construction industries, there is often a need to create high-quality holes in metal blanks of considerable thickness - over 10 mm, where the holes must have high precision, even edges and minimal material deformation. Drilling holes in metal with a thickness of more than 10 mm is a technically difficult task, as it requires the optimal choice of processing method, taking into account the type of material, its properties, the geometry of the holes, the surface roughness, the required accuracy, the processing productivity and the economic feasibility of the chosen method, as well as technological limitations.

DOI 10.15588/1607-6885-2025-3-9

Purpose of the work

The purpose of this work is to review and compare modern methods of making holes in metal with a thickness of more than 10 mm, compare their effectiveness, and study the effect of processing parameters on the quality of the holes obtained. Given the constant improvement of technologies and growing demands for productivity and accuracy, attention will be paid to methods of punching in dies with special tools and drilling, as well as non-traditional methods such as waterjet cutting, laser cutting, and electrical discharge machining (EDM for drilling holes). Each method has its own advantages and limitations, making it more or less suitable for specific production conditions.

Research results

Drilling is the most common method of making holes, performed with a drilling tool. For thick metals, step drilling or pre-reducing the load on the tool is used.

Boring and milling operations are also used to enlarge or form non-standard holes, ensuring high precision and surface cleanliness, but requiring powerful equipment and experienced personnel (figure 1).

Figure 1. Step drill 8-30 mm

The advantages of this method are its simplicity of implementation, availability of equipment, and high precision when properly equipped.

The disadvantages include high tool wear, limitations on hole geometry, and the need for cooling.

Hydroabrasive cutting (Figure 2) combines water pressure and abrasive material. It is used to form complex contours in thick metal. Instead of cutters, the cutting tool is water enriched with abrasive additives, which is supplied under high pressure to the nozzle and destroys the integrity of the metal at high speed. This method allows cutting corrosion-resistant alloys and stainless steel grades. Hydroabrasive cutting outperforms laser cutting by tens of times with a cutting depth of up to 250 mm.

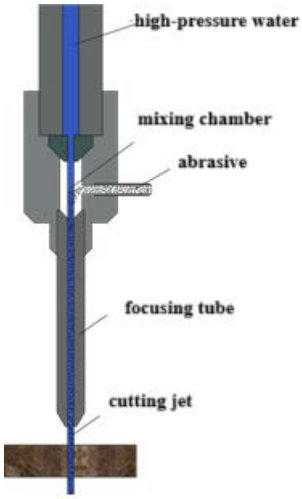

Figure 2. Hydroabrasive cutting scheme

Figure 3. Photo of hydroabrasive cutting

This method provides smooth and flawless edges (figure 4), free from structural defects, micro-scratches or thermal damage. Waterjet cutting also allows complex shapes and patterns to be processed thanks to a multi-axis cutting head.

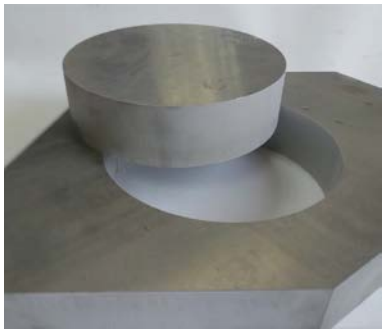

Figure 4. Photo showing the quality of the cut after hydroabrasive cutting

DOI 10.15588/1607-6885-2025-3-9

As an example of the results of hydroabrasive cutting, the results of a study of the cut surface for 30XGSA steel with a thickness of 30 mm [*] are given. The experiment was carried out on a Flow hydroabrasive cutting machine on samples of three materials at a constant pressure of 400 MPa. Garnet abrasive with a grain size of 80 μm was used. During the experiment, the cutting jet feed range was varied from 5 to 120 mm/min. The quality of the resulting surface (figure 5).

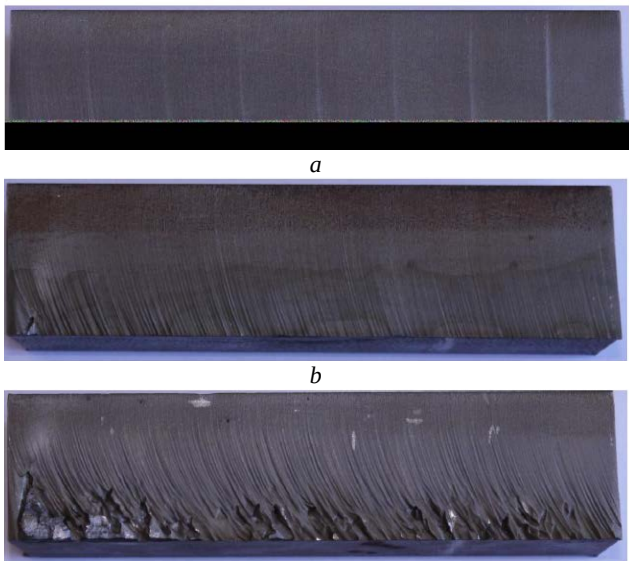

Figure 5. The quality of the surface obtained with different cutting jet feed ranges in hydroabrasive cutting: *a* – cutting jet feed range from 5 to 40 mm/min, *b* – cutting jet feed range from 45 to 80 mm/min, *c* – cutting jet feed range from 85 to 120 mm/min

The results of the research show that as the feed increases, the surface roughness increases. The roughness value also changes across the cut cross-section: the surface is uniform at the top of the cut, and a wavy surface is formed at the bottom of the cut. This phenomenon is due to the fact that the jet loses its cutting ability and deviates from its initial trajectory in the direction opposite to the feed direction.

The advantages of this method are the absence of thermal impact (the material in the working area does not heat up) and versatility (it allows cutting any materials).

The main disadvantages of this method are that defects arise during the cutting process, the nature of which is related to the loss of energy of the cutting jet passing through the material. The cutting ability of the jet is determined by kinetic energy – the speed of the cutting jet, as well as the shape and mass of the abrasive. During the cutting process, the abrasive is destroyed, losing its original shape. The flow, passing through the material layer, slows down, and the jet deviates in the direction opposite to the direction of the cutting jet. This deviation results in defects. The main one is the unevenness of the cut roughness. Analysis of research shows that the surface roughness after waterjet cutting in the range: $R_{(A)}$= 2.05–10.4 μm, $R_{(Z)}$= 12.6–42.3 μm does not meet the requirements for parts with a cut surface roughness of up to class 8. Other disadvantages include the high cost of equipment and the difficulty of creating small-diameter holes.

Promising material separation processes include laser cutting of metals, based on the processes of heating, melting, evaporation, chemical combustion reactions and removal of molten material from the cutting zone. Laser cutting (figure 6) is performed by locally heating the metal with laser radiation focused on its surface. A small portion of the incident radiation is absorbed by the surface layer and causes it to heat up. An oxide film is formed, which increases the proportion of energy absorbed, and the temperature of the metals rises to the melting point.

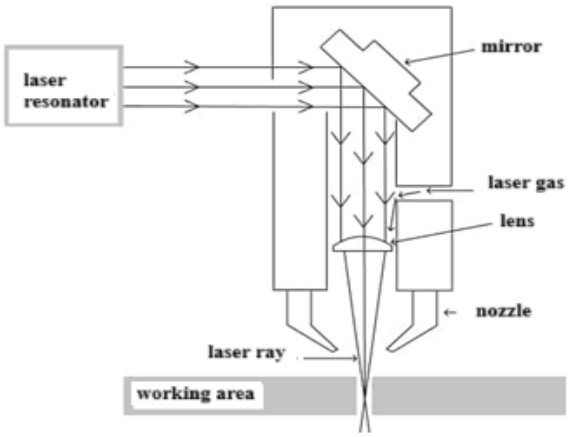

Figure 6. Laser cutting scheme

Analysis of the literature and research results on laser cutting has shown the following:

- the greater the thickness of the sheet, the greater the roughness at comparable laser cutting modes;
- increasing the speed reduces roughness and increases the power and pressure range in order to obtain a cut with minimum roughness;
- increasing pressure increases roughness; reduces the required power and increases the required speed for a given roughness value.
- increasing the focal length increases roughness but reduces the required power and increases the required speed to achieve a given roughness value to a lesser extent than pressure.
- increasing the power increases roughness, reducing the required pressure for a given roughness value.

Figure 7 shows the most common surface defects that occur when cutting certain metals of varying thicknesses [*]. You can see changes in the roughness structure depending on the thickness of the material (Fig. 7*a*, *b*, *e*). Residues of solidified melt of irregular shape (Fig. 5 (*a*, *c*)) or appear as rounded particles that adhere firmly to the lower edge after cooling (Fig. 5*d*, *e*). The surface of some samples may have a clearly defined smoother strip (Fig. 5*b*, *c*). The stainless steel sample (Fig. 5*e*) 5 mm thick has an irregularly shaped welded structure at the bottom, which differs in colour from the upper, smoother part.

DOI 10.15588/1607-6885-2025-3-9

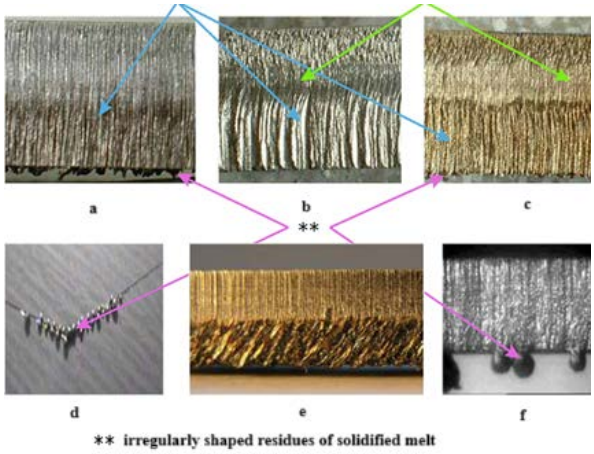

Figure 7. Laser cutting defects: *a* – stainless steel with a thickness of 5 mm, *b* – stainless steel with a thickness of 16 mm, *c* – titanium 30 mm; *d* – electrical steel 0.5 mm; *e* – stainless steel, oxidised at the bottom of the cut due to air mixing 5 mm, *f* – 1 mm stainless steel

The most common surface defects that occur when cutting certain metals of different thicknesses [*]. You can see changes in the roughness structure depending on the thickness of the material (figure 7*a*, *b*, *c*, *e*). Residues of solidified melt of irregular shape (figure 7*a*, *c*) or appear as rounded particles that adhere firmly to the lower edge after cooling (figure 7*d*, *f*). The surface of some samples may have a clearly defined smoother strip (figure 7*b*, *c*). The stainless steel sample (figure 7*e*) 5 mm thick has an irregularly shaped welded structure at the bottom, which differs in colour from the upper, smoother part.

With a material thickness of 10 mm and above, the surface roughness R_Z= 36.42–58.79 μm, which does not meet the requirements for parts with a surface roughness of up to class 8. For thick materials (10 mm and more) with a large ratio of plate thickness to cut width, the quality of the cut is greatly reduced.

The advantages of this method are high precision, the ability to process hard-to-reach areas, and the absence of mechanical contact.

The disadvantages include the high cost of equipment, thickness limitations (over 20 mm is difficult), and thermal impact on the edge of the cut hole.

The electroerosion method is effective for high-alloy and hard metals. Processing occurs through an electrical discharge between the electrode and the workpiece (figure 8). This production method uses electrical pulses to generate sparks in a special liquid medium. These sparks create an electrical erosion effect, which is used to selectively remove metal material from the workpiece, ensuring high-precision machining. This innovative process efficiently converts electrical energy into heat and is widely used in the manufacture of precision components that require exceptional accuracy and surface quality [sales@hlc-metalparts.com].

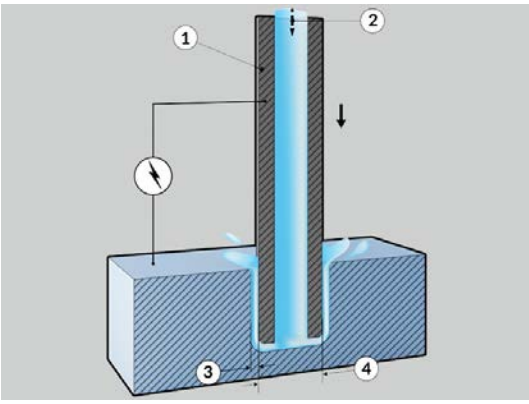

Figure 8. Electrical discharge machining (EDM for drilling holes) scheme

Electrical discharge machining (EDM for drilling holes) is specifically designed to create small holes or micro-pores. A rotating lead tube acts as an electrode, and the tool is advanced into the workpiece, creating a hole through a series of repeated electrical discharges. It is typically used for parts such as nozzles, injectors, filters, and other components that require precise hole diameter and shape.

The advantages of this method are high precision, namely, wire EDM can achieve incredibly tight tolerances, making it ideal for manufacturing complex parts with a high level of precision. Unlike traditional machining methods, electrical discharge machining works without direct contact between the workpiece and the cutting tool, making it faster and less prone to wear. This method allows you to cut a wide range of materials, from metals to alloys and composites, and is suitable for creating complex shapes with complex geometries.

The disadvantages include the slow process and the need for a special dielectric fluid.

Cold stamping is useful for serial or mass production when you need to make a bunch of similar holes in relatively thick blanks. But for single or small-batch production, this method isn't really worth it financially.

The cold stamping method involves making holes by punching metal with stamping equipment, either without preheating the workpiece or with preheating. It is mainly used for mass production with metal thicknesses of up to 12–15 mm, although options are also available for thicker sheets under conditions of increased force.

To conduct research on thick-sheet hole punching, the Department of Metal Forming designed and manufactured an experimental punch for punching holes (figure 9, 10).

DOI 10.15588/1607-6885-2025-3-9

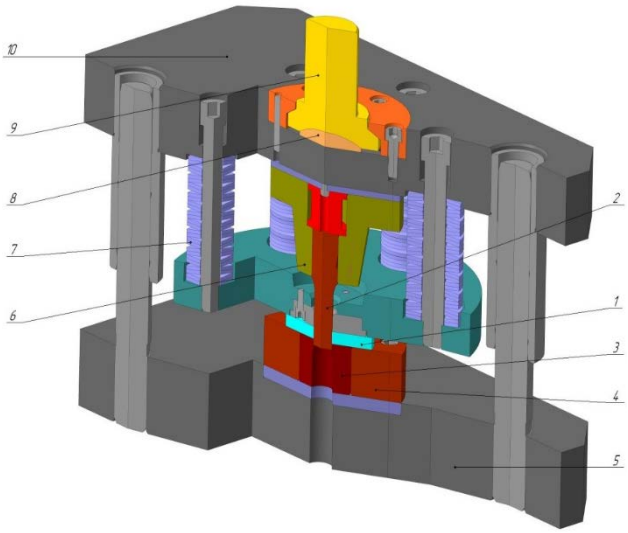

Figure 9. Model of an experimental stamp for punching a hole: 1 – blank; 2 – punch; 3 – matrix; 4 – matrix holder; 5 – lower plate; 6 – punch holder; 7 – disc spring; 8 – support; 9 – shank; 10 – upper plate

Figure 10. Photo of an experimental stamp for punching a hole

For research on thick-sheet hole punching, interchangeable punches and dies were designed and manufactured with different sizes and shapes of the working surface, from flat to stepped.

The advantages of this method are extremely high productivity, excellent repeatability of geometry, the possibility of process automation, and low cost in serial production.

The disadvantages include limitations on the shape and thickness of the hole, the relatively high cost of manufacturing the stamp, the increased need for rigidity of the press equipment, and the possible periodic formation of burrs and deformations of the hole edge.

Conclusions

The results of the analysis showed that the most effective method for making holes in metal with a thickness of more than 10 mm, the most effective method is punching, with each method having its own specific advantages and limitations (table 1).

Table 1 – Comparative table of methods for making holes (thickness 10 mm, Ø 20 mm)

Method	Accuracy (mm)	Speed	Cost	Limitations
Drilling	±0.2–0.5	~0.2–1 holes/min	Low	Drill wear, need for lubrication, low accuracy with high thickness
Hydroabrasive cutting	±0.1–0.2	~50–100 mm/min	High	Expensive equipment, lengthy preparation, complex contour processing
Laser cutting (fibre)	±0.05–0.2	~300–800 mm/min	High	Limitations on heat exposure, may cause scaling and structural changes
Electrical discharge machining (EDM)	±0.01–0.05	~5–15 mm/min	Very high	Only for conductive materials, low productivity
Cold stamping (punching)	±0.1–0.3	~30–60 holes/min	Low (for series production)	Requires dies, initial costs, possible defects on the edges of the hole

Selecting the optimal punching parameters is very important for achieving high-quality holes. In particular, important factors include the force, the geometry of the working surfaces of the punch, and the choice of clearance between the punch and the die. Failure to comply with the

DOI 10.15588/1607-6885-2025-3-9

recommended parameters can lead to defects on the edges of the hole and reduced accuracy and quality of processing.

For single and small-batch production, drilling and laser processing are the optimal methods, while for mass production, punching and stamping are the most effective methods.

The analytical review considers various methods of cutting and punching holes in thick-sheet materials. None of these methods allows for a high-quality cut surface across the entire thickness of the metal at a thickness of 10 mm and above.

It is necessary to investigate the gaps between the die and the punch in order to obtain the accuracy of the punched hole and the quality of the punched hole surface. It is necessary to investigate the influence of different designs of clamping devices on the quality of the cut surface. The force required to remove the bar from the punch with a rigid and movable remover. Investigate the factors that determine the stability of the tool when punching holes in thick sheet material. It is also necessary to investigate the influence of speed parameters on the quality of the holes.

References

1. Ivanenko, O. M. (2018). Metal processing technologies. – Kyiv: Tekhnika Publishing House, 312.

2. Sydorenko, V. P. (2020). Modern methods of metal processing: from drilling to laser cutting. – Kharkiv: Naukova Dumka, 245.

3. Zakharchenko, O. O., & Kovalchuk, P. V. (2017). The influence of processing parameters on the quality of holes in steel 20. // Journal of Metallurgical Technologies, 32(3), 58-63. https://doi.org/10.1234/metal2020.323

4. Demidenko, I. I. (2019). Laser and hydroabrasive drilling in industry. – Lviv: Academy of Sciences, 180.

5. Shevchenko, V. I. (2017). Stamping technologies and their improvement. – Kharkiv : Higher School, 182.

6. Kovalchuk, R. M. (2018). Analysis of cold stamping processes on modern machines. // Technical Journal, 27(5), 34–40.

7. Zakharchenko, V. I. (2019). Modern methods of cold stamping. – Lviv: Technika, 195.

8. Goncharenko, A. S. (2020). Features of the cold stamping process for metals and alloys. – Kyiv : Technika, 215.

9. Shevchenko, V. I. (2020). Cold stamping in modern mechanical engineering: development trends and latest methods. – Kharkiv: Vyshcha Shkola, 190.

10. Melnichenko, O. M. (2020). Analysis of the influence of stamping parameters on the quality of metal products. // Technical Bulletin, 34(6), 48–55.

10. Petrenko, S. V. (2020). Modern cold stamping technologies and their application in enterprises. – Lviv: Polytechnika, 220.

11. Kalyuzhny, V. L. (2023). Development of stamping tooling designs for plastic deformation in cold sheet and volume stamping processes and obtaining products with increased reliability and durability // Completed research works of Igor Sikorsky KPI.

12. Tay, S. (2015). Hole making in metals: modern technologies and future trends. // Journal of Materials Processing Technology, 50(7), 1205–1217. https://doi.org/10.1016 / j.jmatprotec.2015.07.022

13. Zhang, L., & Yang, W. (2015). Cold stamping of high-strength steel: Process modelling and optimisation. // Journal of Manufacturing Processes, 20, 1–10. https://doi.org/10.1016/j.jmapro.2015.05.001

Received 14.08.2025

АНАЛІЗ МЕТОДІВ ОТРИМАННЯ ОТВОРІВ У МЕТАЛІ ТОВЩИНОЮ ПОНАД 10 мм

Віталій Широкобоков — канд. техн. наук, доцент кафедри обробка металів тиском Національного університету «Запорізька політехніка», м. Запоріжжя, Україна *e-mail:* shirokobokov@gmail.com, ORCID: 0000-0003-4294-7406

Василь Обдул — канд. техн. наук, доцент кафедри обробка металів тиском Національного університету «Запорізька політехніка», м. Запоріжжя, Україна, *e-mail:* obdul@zp.edu.ua, ORCID: 0000-0001-6490-8884

Teresa Bajor — д-р технічних наук, Ченстоховський технологічний університет, Ченстохова, Польща, *e-mail:* teresa.bajor@pcz.pl, ORCID: 0000-0003-0895-8523

Наталія Широкобокова — канд. техн. наук, доцент кафедри композиційних матеріалів, хімії та технологій Національного університету «Запорізька політехніка», м. Запоріжжя, Україна, *e-mail:* ORCID 0000-0002-7009-6218

Тетяна Матюхіна — аспірант кафедри обробка металів тиском Національного університету «Запорізька політехніка», м. Запоріжжя, Україна *e-mail:* tetianamatiukhina88@gmail.com, ORCID: 0009-0005-7503-8016

DOI 10.15588/1607-6885-2025-3-9

Мета роботи. *Метою цього дослідження є огляд та порівняльний аналіз сучасних методів створення отворів у металевих заготовках товщиною понад 10 мм, оцінка їхньої ефективності та дослідження впливу параметрів обробки на якість отриманих отворів. Увага приділяється традиційним методам, таким як свердління та штампування спеціалізованими інструментами, а також нетрадиційним методам, включаючи гідроабразивне різання, лазерне різання та електроерозійну обробку (EDM).*

Методи дослідження. *У дослідженні використовувався огляд літератури та експериментальні дослідження. Експериментальні методи включали ступінчасте свердління, розсвердлювання, фрезерування, гідроабразивне різання, лазерне різання, електроерозійне свердління та холодне штампування. Якість отворів оцінювалася за допомогою геометричних вимірювань, аналізу шорсткості поверхні та дослідження зон деформації. Експериментальні установки включали змінні конструкції пуансона та штампу для вивчення впливу геометрії інструменту, зазору між пуансоном та штампом, а також сил різання на якість отвору.*

Отримані результати. *Було визначено, що кожен метод має різні переваги та обмеження. Штампування є найефективнішим для високошвидкісного масового виробництва з послідовною геометрією, але вимагає точного оснащення та жорсткого пресового обладнання. Свердління та лазерне різання підходять для одиничного або дрібносерійного виробництва, пропонуючи високу точність, але меншу швидкість. Гідроабразивне різання забезпечує гладкі краї та мінімальний термічний вплив, хоча воно є дорогим та повільнішим для невеликих отворів. Електроерозійне різання забезпечує виняткову точність для твердих або високолегованих матеріалів, але має низьку продуктивність. Порівняльний аналіз підкреслив вплив параметрів процесу, таких як зазор штампа, сила різання, швидкість подачі та конструкція інструменту, на якість та точність отворів.*

Наукова новизна. *Дослідження забезпечує систематичне порівняння кількох методів виготовлення отворів для товстих металевих заготовок, інтегруючи експериментальні результати з аналізом параметрів процесу. Новизна полягає у визначенні оптимальних параметрів та конструкцій інструментів, які мінімізують дефекти крайок та деформацію, пропонуючи рекомендації щодо високоточного формування отворів у товстих металах, що не було всебічно розглянуто в попередніх дослідженнях.*

Практична цінність. *Результати можуть допомогти у виборі відповідних технологій виготовлення отворів у промисловій металообробці, оптимізувати продуктивність, покращити якість поверхні та точність розмірів, зменшити відходи матеріалу та врахувати проектування інструментів та пресового обладнання для масового та дрібносерійного виробництва.*

Ключові слова: *методи виготовлення отворів, товсті металеві заготовки, штампування, свердління, лазерне різання, гідроабразивне різання, електроерозійна обробка, холодне штампування, оптимізація процесу, якість поверхні.*

Список літератури

1. Іваненко О. М. Технології обробки металів / Іваненко О. М. – К. : Видавництво «Техніка», 2018. – 312 с.

2. Сидоренко В. П. Сучасні методи обробки металу: від пробивання до лазерного різання / Сидоренко, В. П. – Харків : Наукова думка, 2020. – 245 с.

3. Захарченко О. О. Вплив параметрів обробки на якість отворів у сталі 20 / Захарченко О. О., & Ковальчук П. В. // Журнал металургійних технологій. – 2017. – 32(3). – С. 58–63. https://doi.org/10.1234/metal2020.323

4. Демиденко І. І. Лазерне і гідроабразивне свердління в промисловості / Демиденко І. І. – Львів : Академія наук, 2019. – 180 с.

5. Шевченко В. І. Технології штампування та їх удосконалення / Шевченко В. І. – Харків : Вища школа, 2017. – 182 с.

6. Ковальчук Р. М. Аналіз процесів холодного штампування на сучасних машинах / Ковальчук Р. М. // Технічний журнал. – 2018. – 27(5). – С. 34–40.

7. Захарченко В. І. Сучасні методи холодного штампування / Захарченко В. І. – Львів : Техніка, 2019. – 195 с.

8. Гончаренко А. С. Особливості процесу холодного штампування металів та сплавів / Гончаренко А. С. – К. : Техніка, 2020. – 215 с.

9. Шевченко В. І. Холодне штампування в сучасному машинобудуванні: тенденції розвитку та новітні методи / Шевченко В. І. – Харків : Вища школа, 2020. – 190 с.

10. Мельниченко О. М. Аналіз впливу параметрів штампування на якість металевих виробів / Мельниченко О. М. // Технічний вісник. – 2020. – 34(6). – С. 48–55.

11. Петренко С. В. Сучасні технології холодного штампування та їх застосування на підприємствах / Петренко С. В. – Львів : Політехніка, 2020. – 220 с.

12. Калюжний В. Л. Розробка конструкцій штампового оснащення для реалізації пластичної деформації в процесах холодного листового і об’ємного штампування та отримання виробів з підвищеною надійністю і довговічністю Калюжний В. Л. // Завершені науково-дослідні роботи КПІ ім. Ігоря Сікорського – 2023.

13. Tay S. Hole making in metals: modern technologies and future trends / Tay S. // Journal of Materials Processing Technology. – 2015. – 50(7). – С. 1205–1217. https://doi.org/10.1016/j.jmatprotec.2015.07.022

14. Zhang, L. Cold stamping of high-strength steel: Process modeling and optimization / Zhang, L., & Yang, W. // Journal of Manufacturing Processes. – 2015. – 20, 1–10. https://doi.org/10.1016/j.jmapro.2015.05.001

DOI 10.15588/1607-6885-2025-3-9